ADC in Embedded Systems (STM32)

Introduction

The analog-to-digital converters allows the microcontroller to accept an analog value like a sensor output and convert the signal into the digital domain

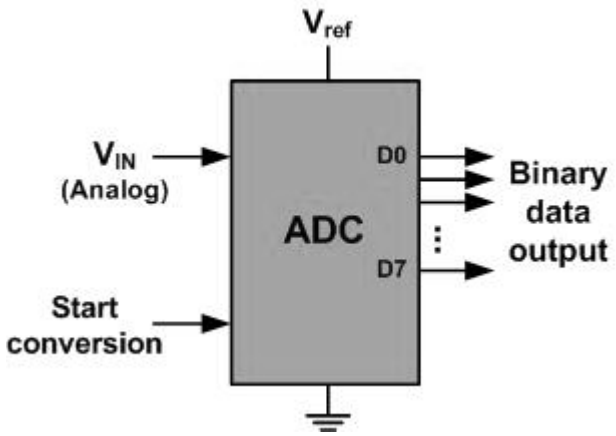

Major characteristics of the ADC

The ADC converts an analog voltage Vin into a digital number according to:

$Digital\ value = \frac{Vin}{Vref} \times (2^n - 1)$

Resolution:

Resolution defines the precision of the conversion. It is measured in bits. Higher-resolution ADCs provide a smaller step size, where step size is the smallest change that can be discerned by an ADC.we can control the step size with the help of what is called **Vref**.

n-bit	Number of steps	Step size
8	256	5V/256 = 19.53 mV
10	1024	5V/1024 = 4.88 mV
12	4096	5V/4096 = 1.2 mV
16	65,536	5V/65,536 = 0.076 mV

Sample time:

Sample time defines the duration during which the ADC's internal capacitor is connected to the external analog signal before the actual digital conversion begins. This phase allows the ADC's internal sample-and-hold circuit to charge to the analog input voltage. It is expressed in ADC clock cycles and can range from very short (e.g. 1.5 cycles) to significantly longer durations (e.g. 601.5 cycles), depending on the STM32 family and configuration.

choosing the right sample time is a trade-off:

- Too short: inaccurate results due to insufficient charge time or voltage settling.
- Too long: reduced throughput and slower system response.

In STM32, the ADC conversion time consists of two phases:

1. Sampling Time (Ts):
   The time during which the ADC samples the input voltage via its sample-and-hold capacitor. You can configure this in STM32CubeMX or directly in the ADC_SAMPLETIME register.
2. Conversion Time (Tc):
   The time it takes the ADC to convert the sampled analog signal to a digital value. For 12-bit resolution, this is a fixed 12.5 ADC clock cycles.

$$T_{conv} = \frac{\text{Sampling Cycles} + \text{Conversion Cycles}}{\text{ADC CLOCK}}$$

Conversion steps:

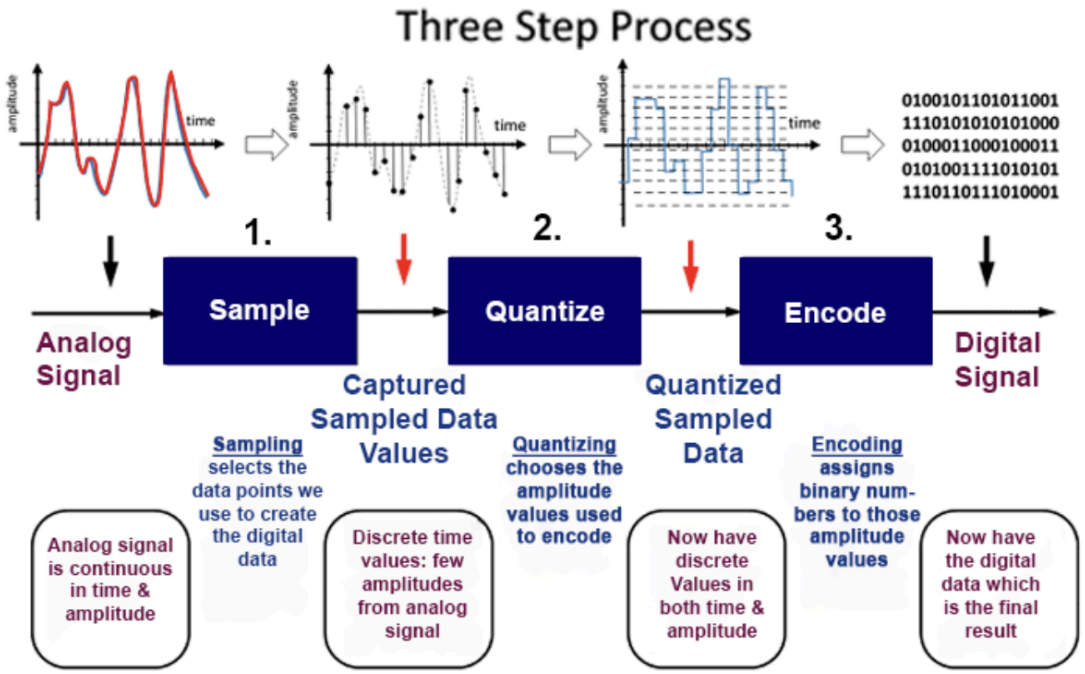

ADC Conversion Modes

AD converter supports several conversion modes:

- Single mode, which converts only one channel, in single-shot or continuous mode.
- Scan mode, which converts a complete set of pre-defined programmed input channels, in single-shot or continuous mode.

- Discontinuous mode converts only a single channel at each trigger signal from the list of pre-defined programmed input channels.

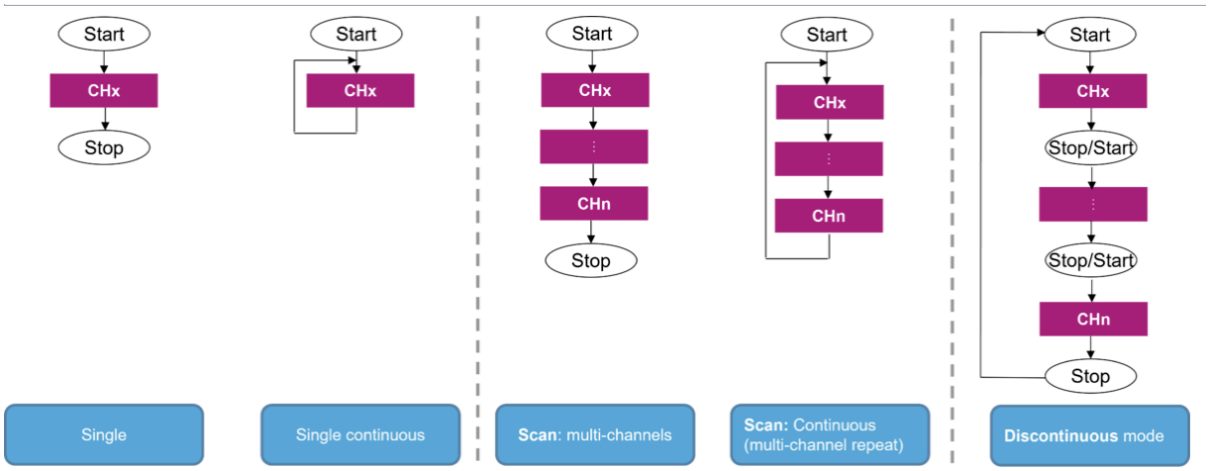

Data Transfers:

The ADC conversion result is stored in a 16-bit data register. The system can use CPU polling, interrupts or the DMA controller to make use of the conversion data. An overrun flag can be generated if data is not read before the next conversion data is ready. In case of overrun, either the new sample is dropped or the previous sample is overwritten.

1. Polling Mode: the CPU manually initiates each analog conversion and then idles in a busy-loop, continuously checking the status register until the conversion is complete. This approach is simple but inefficient, as it fully occupies the CPU during the entire conversion process, making it suitable only for applications where the microcontroller has no other tasks to perform.
2. Interrupt Mode: the ADC is configured to generate an interrupt request upon the completion of a conversion. This allows the **CPU** to perform other meaningful work in the main program loop and only be diverted to handle the new ADC result when it is ready. This method is far more

efficient than polling and is ideal for systems that must respond to other events while sampling analog sensors.

3. DMA Mode: the Direct Memory Access controller is configured to manage the data transfer from the ADC's data register directly to a memory variable. This completely offloads the data handling task from the **CPU**, which is free to execute complex code without interruption. The DMA operates in the background, providing seamless and efficient data flow for high-performance or continuous sampling applications.